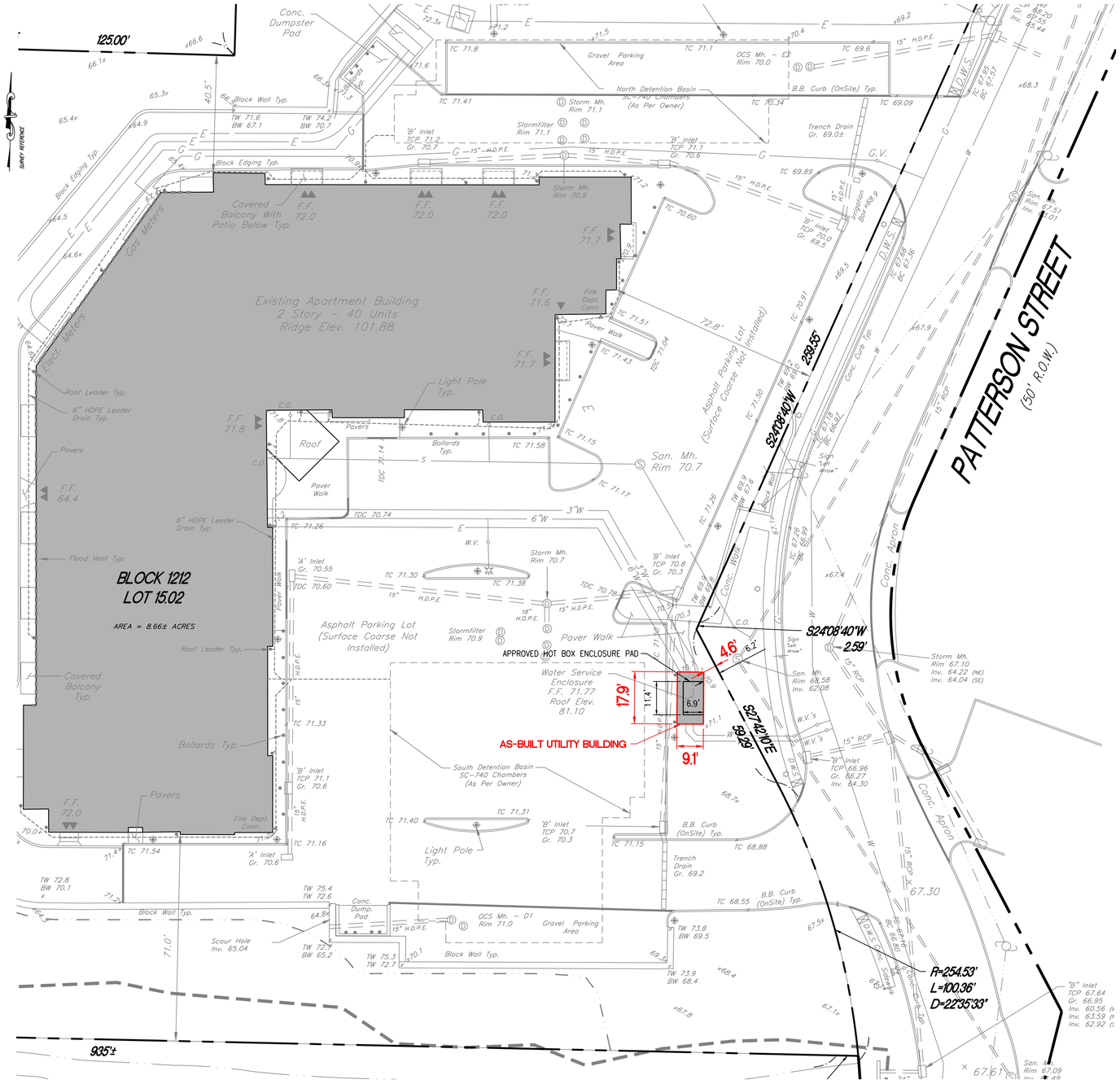

BOROUGH OF HILLSDALE - ZONING TABLE OF BULK REQUIREMENTS

INDUSTRIAL ZONE "I"

Block 1212 Lot(s) 15.02

Zoning Regulation:	*REQ'D/PERMITTED*	*PREVIOUSLY APPROVED*	*STATUS*	*PROPOSED CARPORT*	*STATUS*	*2020 AS-BUILT*	*STATUS*	*CODE*
Permitted Uses	See Note 1	Multifamily Dwelling	V	Multifamily Dwelling	C	Multifamily Dwelling	C	*BHO §310-53[1]*
Lot Size Min (sf)	20,000	372,874	C	372,874	C	372,874	C	*BHO §310-53[1]*
Lot Frontage Min (ft)	100	419.20	C	419.20	C	419.20	C	*BHO §310-53[1]*
Lot Width Min (ft)	100	365.4	C	365.4	C	365.4	C	*BHO §310-53[1]*
Lot Depth Min (ft)	N/A	>100	N/A	>100	N/A	>100	N/A	*BHO §310-53[1]*
Front Yard Min (ft)	25	72.8	C	72.8	C	**72.8**	C	*BHO §310-53[1]*
Side Yard Min (ft) (see note 2)	30	40.4	C	40.4	C	**40.5**	C	*BHO §310-53[1]*
Rear Yard Min (ft)	10	>10	C	>10	C	>10	C	*BHO §310-53[1]*
Bldg. Coverage Max (%)	50%	6.8%	C	6.8%	C	6.8%	C	*BHO §310-53[1]*
Impervious Coverage Max (%)	N/A	18.3%	N/A	18.3%	N/A	18.3%	N/A	*BHO §310-53[1]*
Bldg Height Max (ft) (see note 7)	30	32.99	V	32.99	C	32.99	C	*BHO §310-53[1]*
Floor Area Ratio (F.A.R.) Max (%)	N/A	14.5%	N/A	14.5%	N/A	14.5%	N/A	*BHO §310-53[1]*
Buffer Area at Residential Zone (ft)	See Note 3	N/A (see note 4)	N/A	N/A (see note 4)	N/A	N/A (see note 4)	N/A	*BHO §310-53[1]*
Accessory Structures (Carport)								
Building Height Max (ft)	15	N/A	N/A	15.0	C	15.0	C	*BHO §310-55[H]*
Front Yard Setback (ft)	25 (SEE NOTE 8)	N/A	N/A	11.3	V	11.3	V	*BHO §310-55[H]*
Accessory Structures (Utility Building)								
Building Height Max (ft)	**15**	**4.4**	**C**	**N/A**	**N/A**	**9.3**	**C**	***BHO §310-55[H]***
Front Yard Setback (ft)	**25 (SEE NOTE 8)**	**6.2**	**V**	**N/A**	**N/A**	**4.6**	**V**	***BHO §310-55[H]***
Parking Setback from Street Min (ft)	10	10	C	10	C	10	V	*BHO §310-53[1]*
Total Parking Spaces	77	See Totals Below	C	See Totals Below	C	See Totals Below	C	*See note 5*

Additional Site Statistics:					*COMMENTS:*
Building Coverage (sf)		25,436		25,436	
No. of Dwelling Units		40		40	Based on architectural plan
Average Grade (El. In ft)		69.0		69	
Elevation of Roof (El. In Ft)		101.99		101.99	Based on architectural plan
Parking					
No. of Standard Spaces	77	74		74	see note 5
No. of ADA Spaces	4	5		5	see note 6
No. of Banked Stalls		17		17	17
Total	77	79		79	not including banked stalls
		96		96	including banked stalls

Abbreviations:
C - Complies/Conforms to specified code
V - Variance from Municipal Ordinance Required
ENC - Exising Non-Conformance
N/A - Not applicable
BHO - Borough of Hillsdale Ordinance

Notes:

1) Light industrial use which could not cause injurious or obnoxious noise, vibration, smoke, gas fumes, odors, dust or other objectionable conditions.
a. Laboratories: research, experimental or testing
b. Light, non-nuisance manufacturing, processing, fabrication, assemblage, packaging and warehousing of products
c. Public Utility installations

2) Minimum 30' on each side of 15% of lot width on each side, whichever is lesser.

3) All permitted commercial and industrial activities or processes shall take place within an enclosed building. Incidental storage out-of-doors shall be shielded from view from public streets and adjacent residence zones by fencing, landscaping, or other appropriate measures.
Whenever any lot in a Commercial "C" District or in an Industrial "I" District shall have a common boundary line, in whole or in part, with a lot or lots in a Residential District, no commercial or industrial use shall be commenced or maintained on the lot in such Commercial or Industrial District unless and until there shall first have been established and, at all times during such use, maintained, along or in line the immediate vicinity of such common boundary line, a buffer strip on which there shall be closely planted evergreens or other natural foliage, not less than six feet in height, and of such character as will effectively screen such use from the abutting Residential District.

4) Buffer area at residential zone is required for commerical and industrial uses. The amended site plan proposes a multifamily dwelling residential use, therefore a buffer area to an adjacent residential zone is not required.

5) Per RSIS § 5:21-4.14 Table 4.4 Parking Requirements for Residential Land Uses:
(15) 1 Bedroom require 1.8 spaces: 27
(24) 2 Bedroom require 2.0 spaces: 48
(1) 3 Bedroom require 2.1 spaces: 2.1
Total: = 77
RSIS notes: Parking spaces resulting in fractional space for entire development, any fraction 1/2 or less may be disregarded, and anything excess of 1/2 shall be counted as one parking space.

6) Per ADA Standards for Accessible Design: 76 to 100 parking spaces require min. 4 ADA parking spaces with min. 1 of the 4 having min. 96" wide access aisle for van accessibility.

7) §310-4 Building Height Definition - The vertical dimension measured from the average elevation of the finished grade at the perimeter of the building to the highest point of the roof.
Average finished grade = (71.73 + 71.9 + 71.55 + 71.4 + 71.5 + 65.0 + 64.5 + 64.5 + 66.0 + 72.0) / 10 = 69.0 (see grading plan C-401 for grade shots)
Finish Floor Elevation = 72.0
FF To Peak of Roof = 29.99'
Finish Floor Elevation + Distance to Peak Roof - Average finished grade = 72 + 29.99' - 69.0 = 32.99'

8) §310-55(H) No accessory structure other than a conforming sign, flagpole or fence shall be located in a required front yard.

IMPERVIOUS COVERAGE SUMMARY

	EXISTING	PROPOSED	NET INCREASE	PROPOSED WITH CARPORT	NET INCREASE	UTILITY BUILDING	NET INCREASE**
IMPERVIOUS COVERAGE (%)	*0%*	**18.3%**	18.3%	18.3%	0.0%	**18.3%**	0.0%
IMPERVIOUS COVERAGE (SF)	*0*	**68,082**	68,082	68,166	84	**68,251**	85

NOTE:

** IMPERVIOUS COVERAGE INCREASE IS THE DIFFERENCE BETWEEN APPROVED ENCLOSURE AND AS-BUILT UTILITY BUILDING.

REFERENCES & GENERAL NOTES:

1. PLAN REFERENCES BOUNDARY AND TOPOGRAPHIC INFORMATION TAKEN FROM MAP ENTITLED "AS-BUILT SURVEY PREPARED BY AZZOLINA & FEURY ENGINEERING, INC., PARAMUS, N.J.
2. SEE ADDITIONAL DETAILS AND AS-BUILT PHOTOS ON C-342 UTILITY BUILDING DETAILS, SHEET 2 OF 2.

DRESDNER ROBIN

DRESDNER ROBIN ENVIRONMENTAL MANAGEMENT, INC.
55 LANE ROAD, SUITE 220, FAIRFIELD, NJ 07004
TEL: 973.696.2600 FAX: 973.696.1362
NJ CERTIFICATE OF AUTHORIZATION : 24GA27926000

JERSEY CITY ▪ FAIRFIELD ▪ ASBURY PARK ▪ CHERRY HILL

№	DATE	DESCRIPTION	BY

REVISIONS:

OWNER / APPLICANT:

305 PATTERSON ST. LLC
PO BOX 100
HACKENSACK, NEW JERSEY 07602

DRAWING TITLE:

UTILITY BUILDING SITE PLAN

PROJECT:

THE PRESERVE AT HILLSDALE

LOCATION:

LOTS 15 & 16, BLOCK 1212
BOROUGH OF HILLSDALE
BERGEN COUNTY,
NEW JERSEY, 07642

07/02/2020

GRANT B. LEWIS
PROFESSIONAL ENGINEER
NJ LICENSE NUMBER 24GE04809200

SCALE:
20 10 0 20
SCALE: 1"=20'

DRAWN BY: MSB | DGR	CHECKED BY: GBL	DRAWING NUMBER: C-341
SCALE: 1"=20'	DATE: 07-02-2020	
JOB No: 10938-001		SHEET 01 OF 02

DUE TO INHERENT ERRORS IN REPRODUCTION METHODS, ERRORS MAY OCCUR WHEN SCALING THIS DRAWING

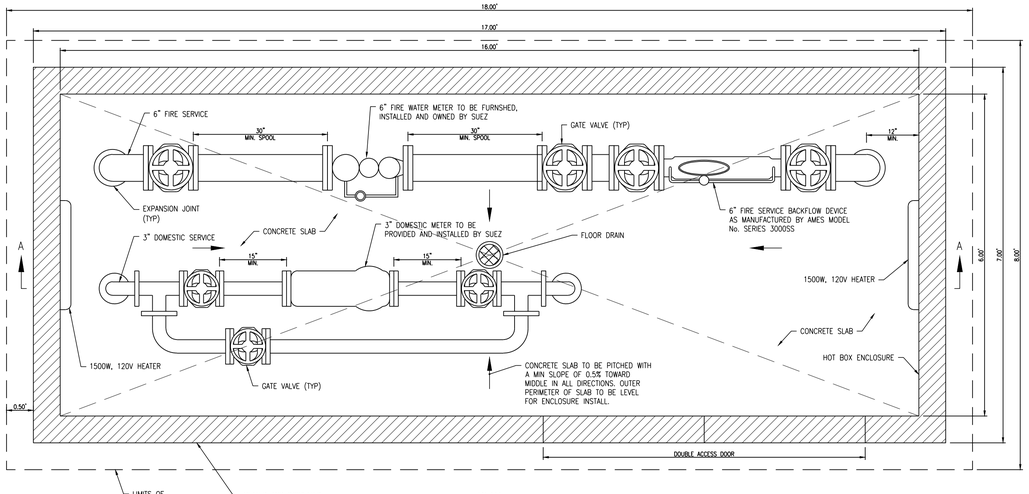

PLAN

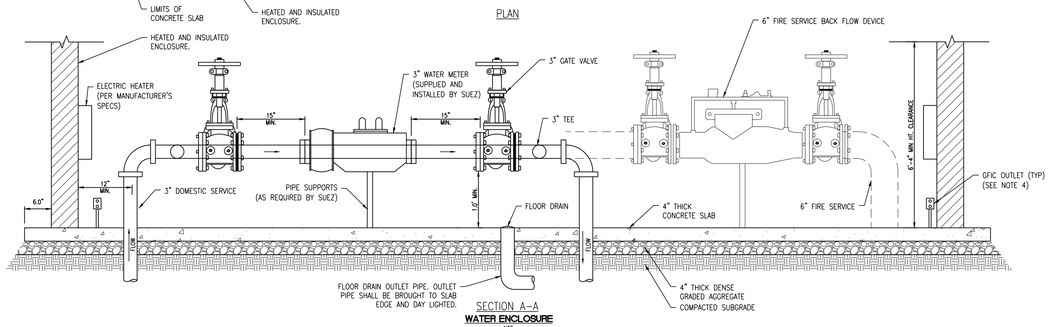

SECTION A–A

WATER ENCLOSURE

NTS

ENCLOSURE NOTES:

1. CONCRETE TO BE 28 DAY COMPRESSIVE STRENGTH f'c = 4500 PSI.
2. STEEL REINFORCEMENT = ASTM A-615 GRADE 60.
3. FINAL DIMENSIONS OF ENCLOSURE TO BE VERIFIED BY CONTRACTOR PRIOR TO CONSTRUCTION BASED ON WATER EQUIPMENT TO BE UTILIZED.
4. SEE MEP PLANS FOR ELECTRIC SERVICE TO HOT BOX ENCLOSURE.
5. STRAINER AND METER TO BE SUPPLIED AND INSTALLED BY SUEZ.
6. ALL PIPING TO BE DUCTILE IRON WITH FLANGED JOINTS.
7. CONTRACTOR TO PROVIDE PIPE SUPPORTS IF REQUIRED BY SUEZ.
8. FINAL DESIGN OF ENCLOSURE TO BE PREPARED BY CONTRACTOR.
9. CONTRACTOR TO COORDINATE WITH SUEZ WATER PRIOR TO CONSTRUCTION OF ENCLOSURE.

PREVIOUSLY APPROVED 11.5' L x 7' W x 4.4' HT HOT ENCLOSURE

18.7' L x 9.8' W x 9.3' HT WATER ENCLOSURE

AS-BUILT UTILITY BUILDING SIDE ELEVATION

AS-BUILT UTILITY BUILDING FRONT ELEVATION

AS-BUILT UTILITY BUILDING REAR ELEVATION

AS-BUILT UTILITY BUILDING INTERIOR

DRESDNER ROBIN

DRESDNER ROBIN ENVIRONMENTAL MANAGEMENT, INC.
55 LANE ROAD, SUITE 220, FAIRFIELD, NJ 07004
TEL: 973.696.2600 FAX: 973.696.1362
NJ CERTIFICATE OF AUTHORIZATION : 24GA27926000

JERSEY CITY ▪ FAIRFIELD ▪ ASBURY PARK ▪ CHERRY HILL

Nº	DATE	DESCRIPTION	BY

REVISIONS:

OWNER / APPLICANT:

305 PATTERSON ST. LLC
PO BOX 100
HACKENSACK, NEW JERSEY 07602

DRAWING TITLE:

UTILITY BUILDING DETAILS

PROJECT:

THE PRESERVE AT HILLSDALE

LOCATION:

LOTS 15 & 16, BLOCK 1212
BOROUGH OF HILLSDALE
BERGEN COUNTY,
NEW JERSEY, 07642

07/02/2020

GRANT B. LEWIS
PROFESSIONAL ENGINEER
NJ LICENSE NUMBER 24GE04809200

SCALE:

DRAWN BY: MSB | DGR	CHECKED BY: GBL	DRAWING NUMBER: C-342
SCALE:	DATE: 07-02-2020	
JOB No: 10938-001		SHEET 02 OF 02

DUE TO INHERENT ERRORS IN REPRODUCTION METHODS, ERRORS MAY OCCUR WHEN SCALING THIS DRAWING